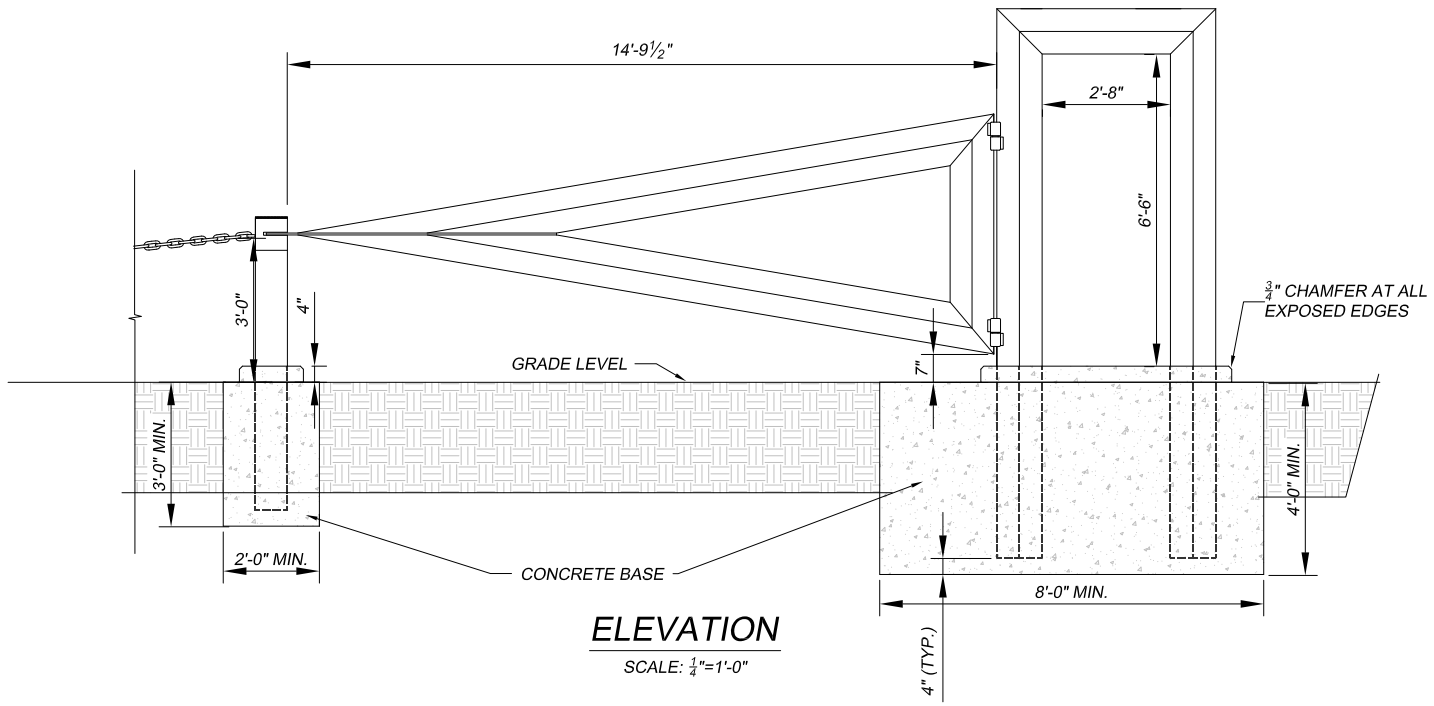

ELEVATION

SCALE: ¼"=1'-0"

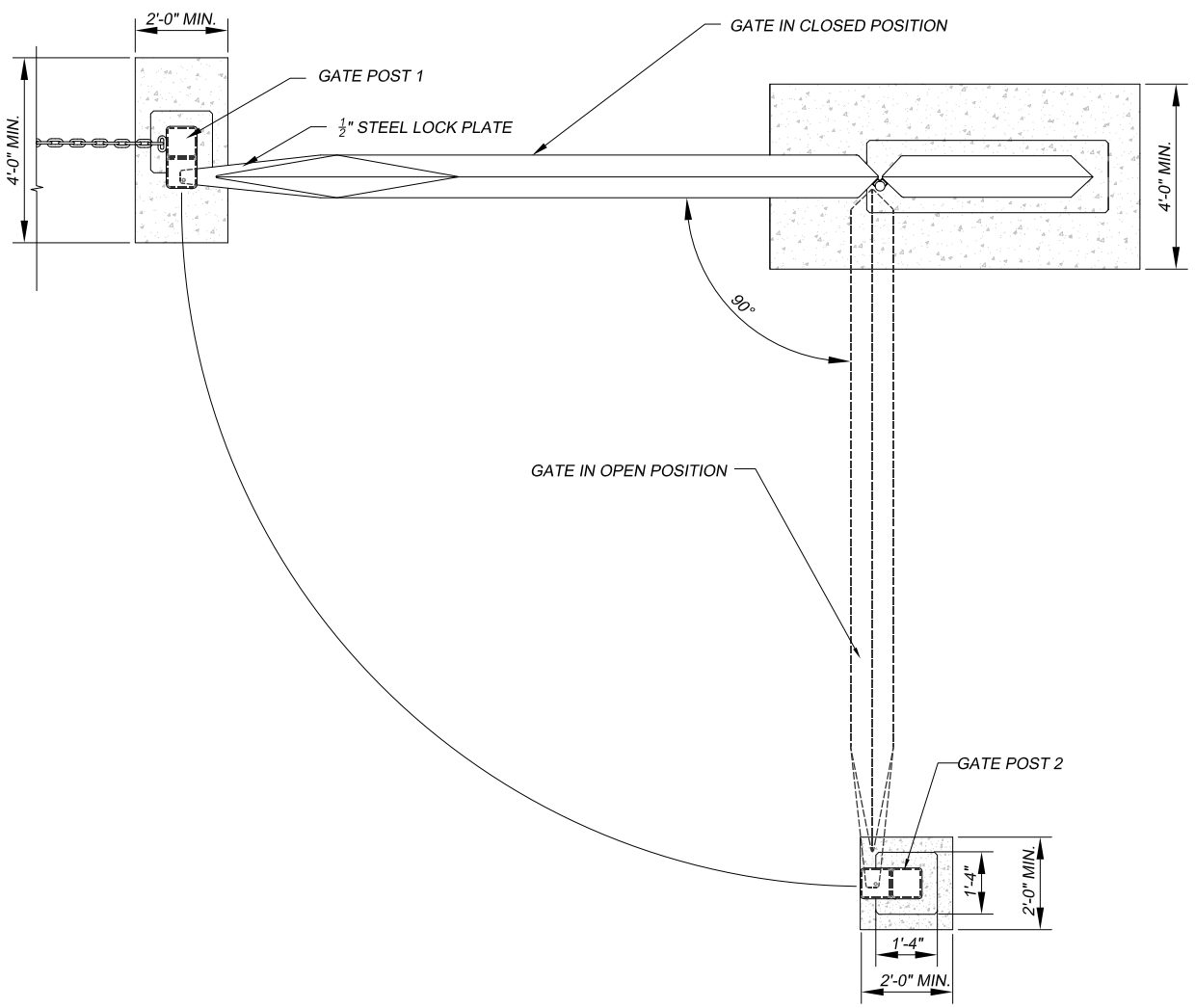

PLAN

SCALE: ¼"=1'-0"

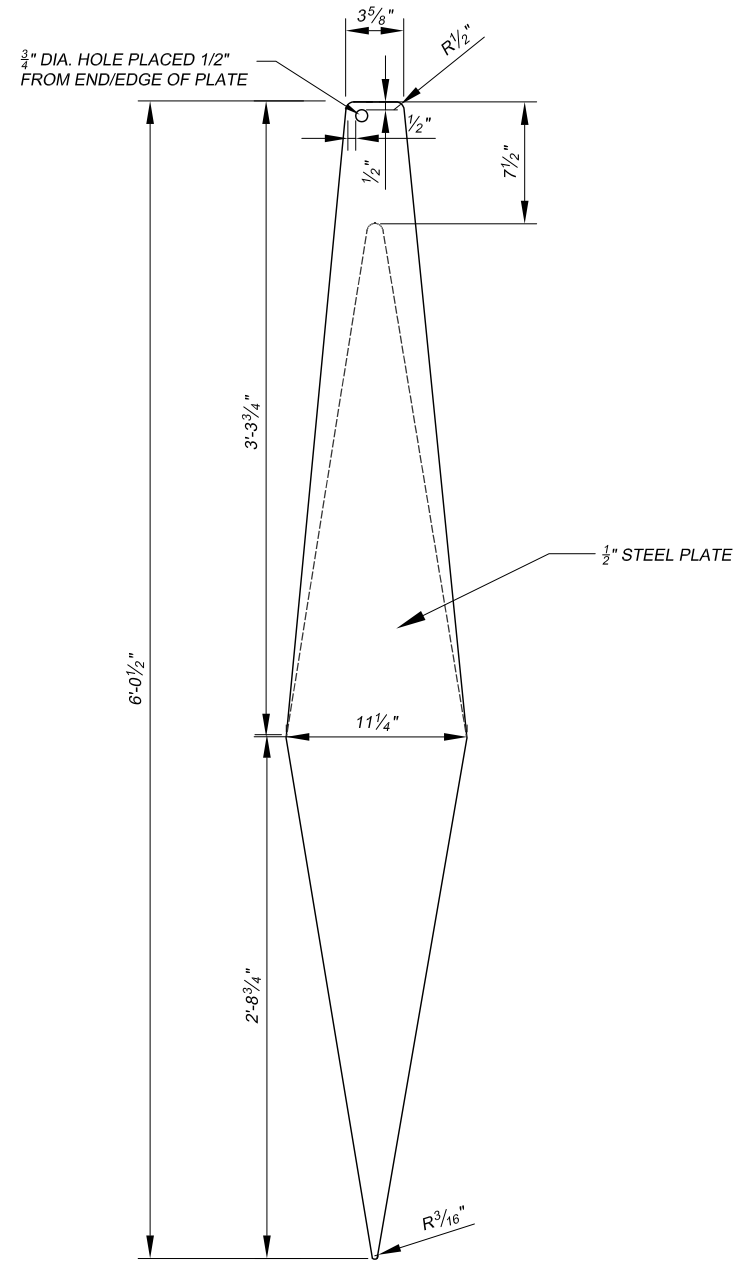

LOCK PLATE DETAIL

SCALE: 1"=1'-0"

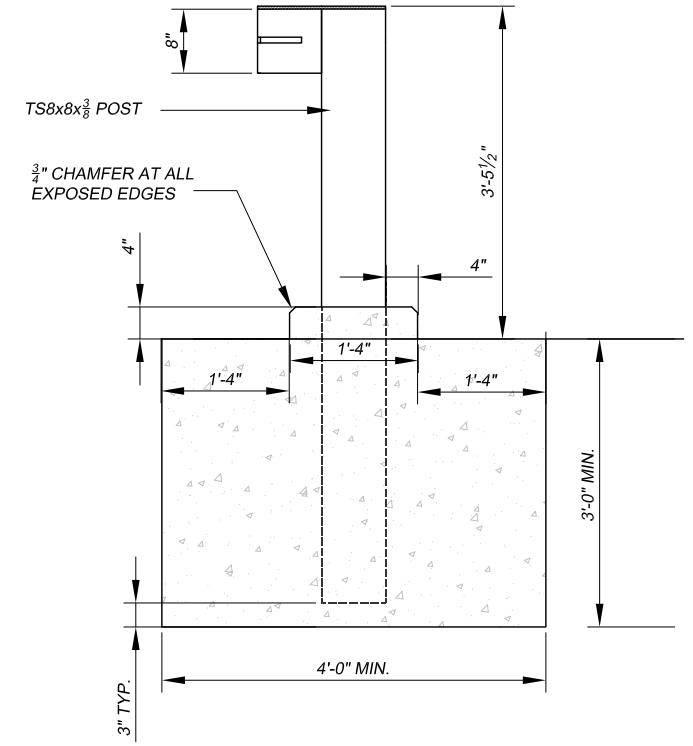

GATE POST 1 DETAIL

SCALE: ½"=1'-0"

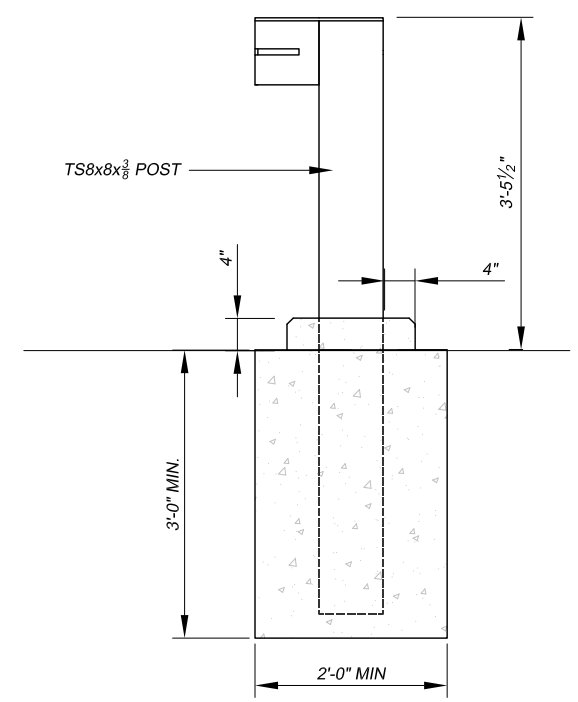

GATE POST 2 DETAIL

SCALE: ½"=1'-0"

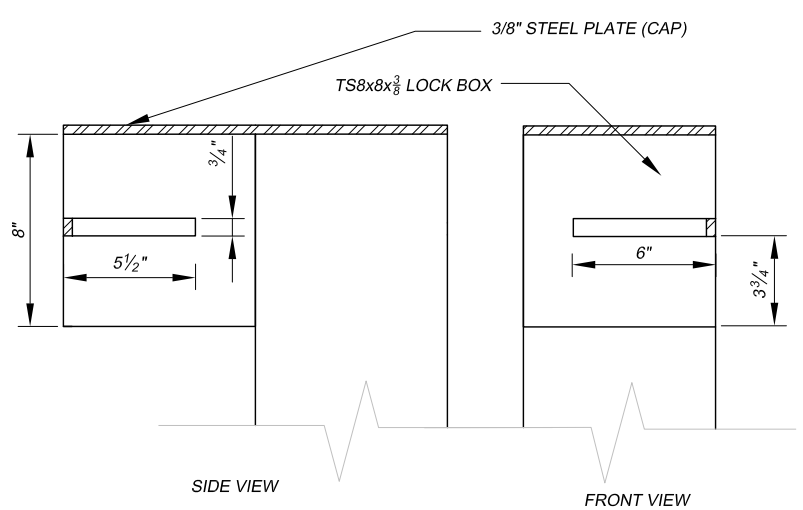

LOCK BOX DETAIL

SCALE:1 ½"=1'-0"

ABANDONED MINE LAND PROGRAM
MINING AND MINERALS DIVISION
ENERGY, MINERALS AND NATURAL RESOURCES DEPARTMENT

SCALE: AS SHOWN		DRAWN BY: JTG
DATE: OCT. 5, 2010		REVISED:

SWING GATE DETAILS

Harding Pegmatite Mine Safeguard Project

DRAWING NUMBER: FIGURE 7